Mobile Automotive Cart Assembly

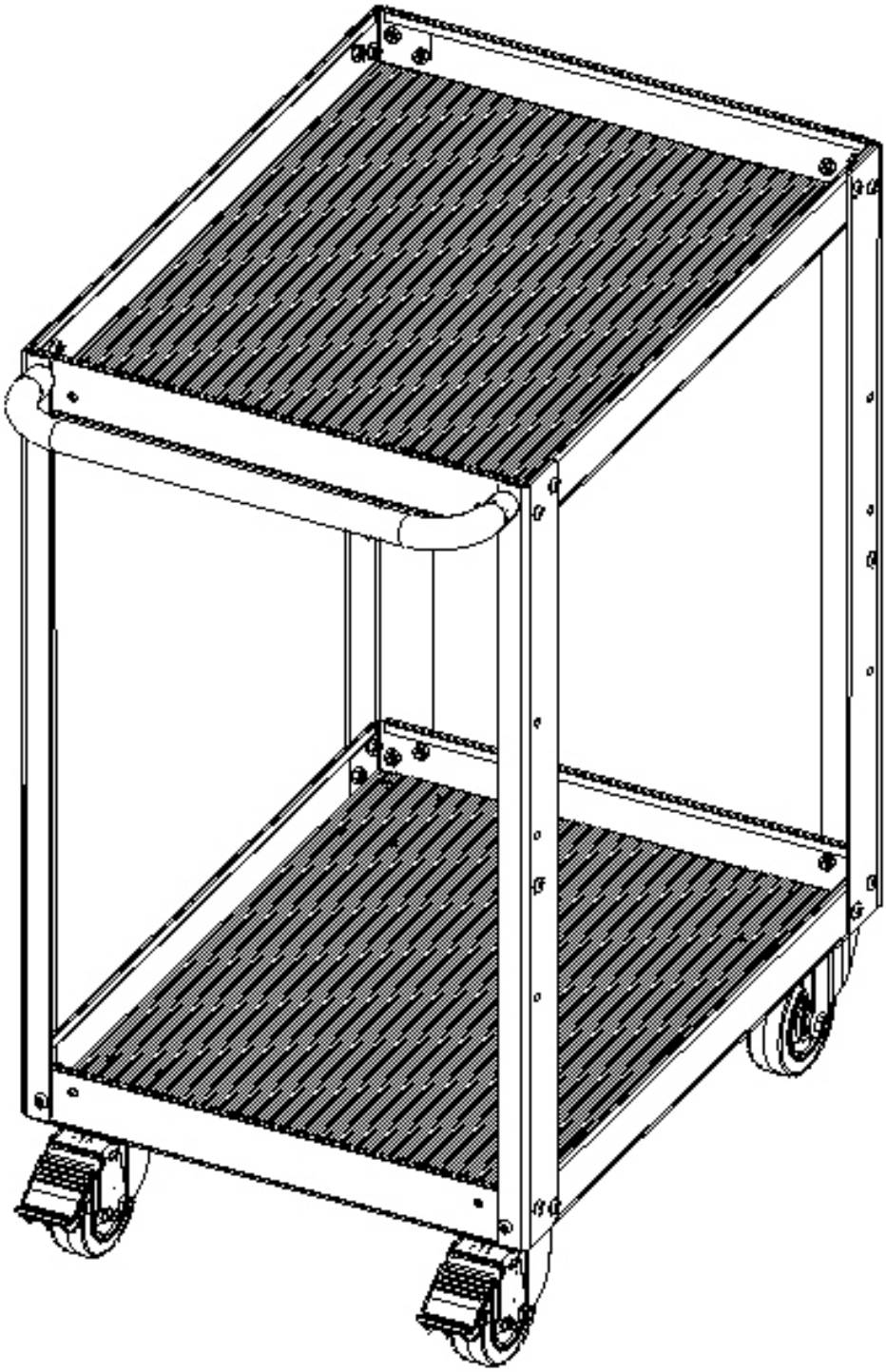

Mobile Automotive Cart Assembly

General Information:

The following provides step-by-step instructions for assembling the Mobile Automotive Cart. The finished assembly will consist of the following:

(1) Cart bottom shelf, (1) or (2) shelves, (1) ribbed mat per shelf (this includes a mat for the bottom shelf), (2) front posts, (2) rear posts, (2) rigid casters, (2) locking swivel casters, (1) handle, (2) handle mounting plates (not included or used on all cart sizes) and mounting hardware.

When received complete assembly will be required for the Mobile Automotive Cart.

Before Installation:

Before you begin installing the Mobile Automotive Cart read through the entire assembly instructions to familiarize yourself with the assembly/installation process.

When installing the Automotive Cart it is important to follow the same sequence as described in this manual.

Mobile Automotive Cart Assembly

Tools Required:

- 3/8” and 1/2” sockets, open end or adjustable wrenches
- 3/16 and 7/16 allen wrenches

Item	Description	Qty.	Picture
1	Bottom Shelf	1	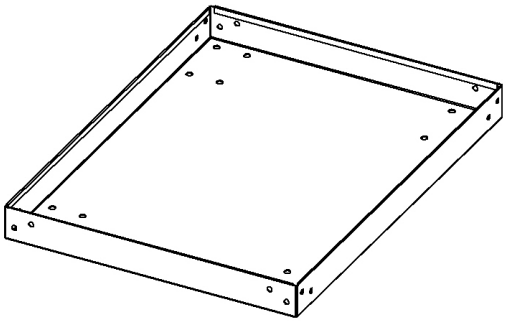
2	Shelf	1 (2-shelf cart) or 2 (3-shelf cart)	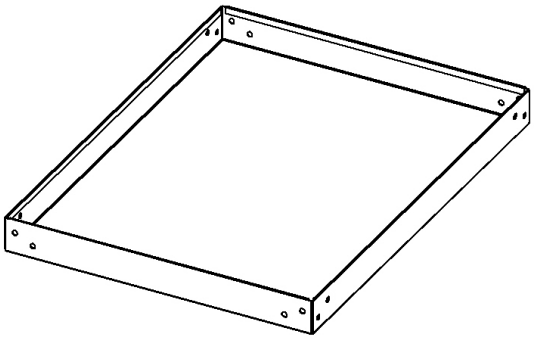
3	Front Post	2	

Mobile Automotive Cart Assembly

4	Rear Post	2	
5	Ribbed Mat	2 (2-shelf cart) or 3 (3-shelf cart)	
6	Push Handle	1	
7	3.5” Rigid Caster	2	
8	3.5” Swivel Caster with Lock	2	
9	Handle Backer Plate	*2	

Mobile Automotive Cart Assembly

10	5/16-18 x 5/8” Button Head cap Screw	16	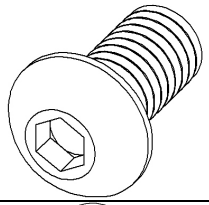
11	5/16-18 Tri-Lok Flange Hex Nut	16	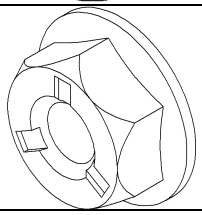
12	1/4-20 x 1/2” Button Head Cap Screw	**	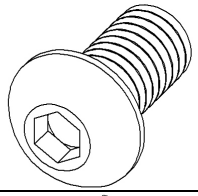
13	1/4-20 Hex Kep Nut	**	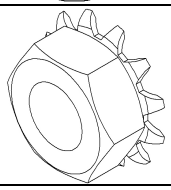
14	M6-1 x 16 Hex Head Bolt		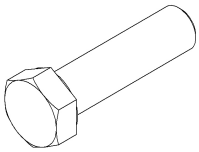

Mobile Automotive Cart Assembly

Figure 1- Bottom Shelf and Caster Assembly

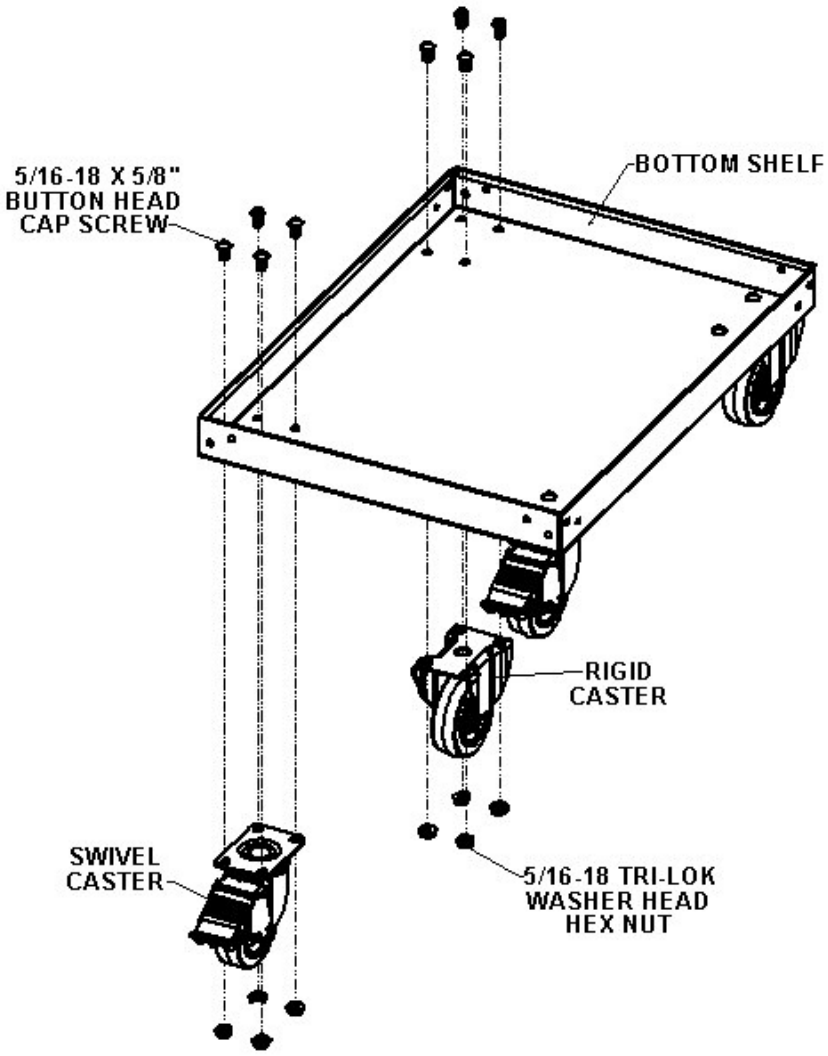

1. Bolt (2) Rigid Casters to Bottom Shelf with (8) included 5/16-18 x 5/8" Button Head cap Screws and (8) included 5/16-18 Tri-Lok Flange Hex Nuts using 3/16" Allen wrench
   Note: Mount both Rigid Casters along shortest length side of Cart (to be on opposite side of Cart from both Swivel Casters)
2. Bolt (2) Swivel Casters with Lock to Bottom Shelf with (8) included 5/16-18 x 5/8" Button Head cap Screws and (8) included 5/16-18 Tri-Lok Flange Hex Nuts using 3/16" Allen wrench
   Note: Mount both Swivel Casters along opposite shortest length side of Cart (to be on opposite side of Cart from both Rigid Casters)

Mobile Automotive Cart Assembly

Figure 2 - Front and Rear Post Assembly:

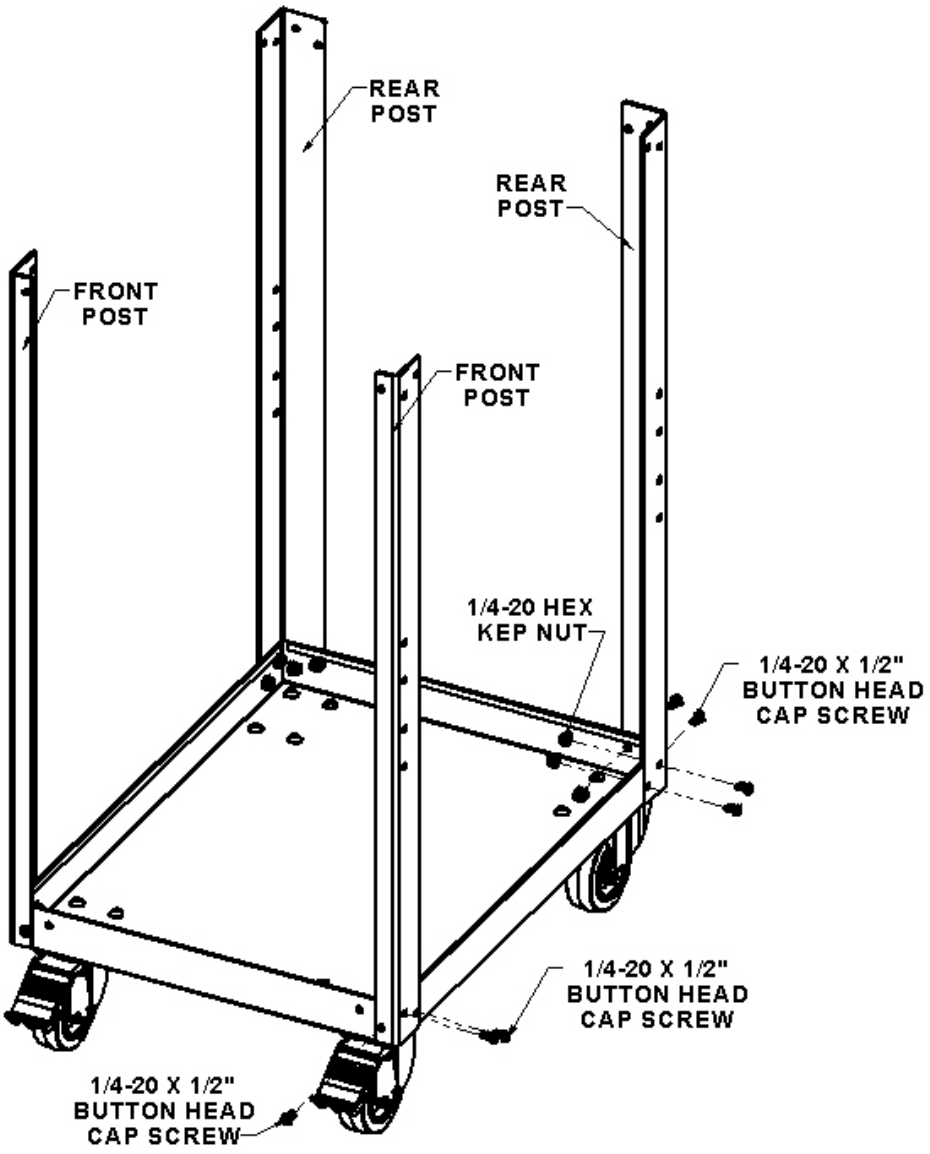

1. Determine Front Post from Rear Post (on Front Post one flange is shorter then the other, on Rear Post both flanges are of equal length)
2. Locate (1) Front Post on corner of Swivel Caster side as shown in Figure
3. Loosely bolt Front Post to Bottom Shelf using () included 1/4-20 x 1/2" Button Head Cap Screws and () included 1/4-20 Hex Kep Nuts

Mobile Automotive Cart Assembly

Figure 3 - Shelf Assembly

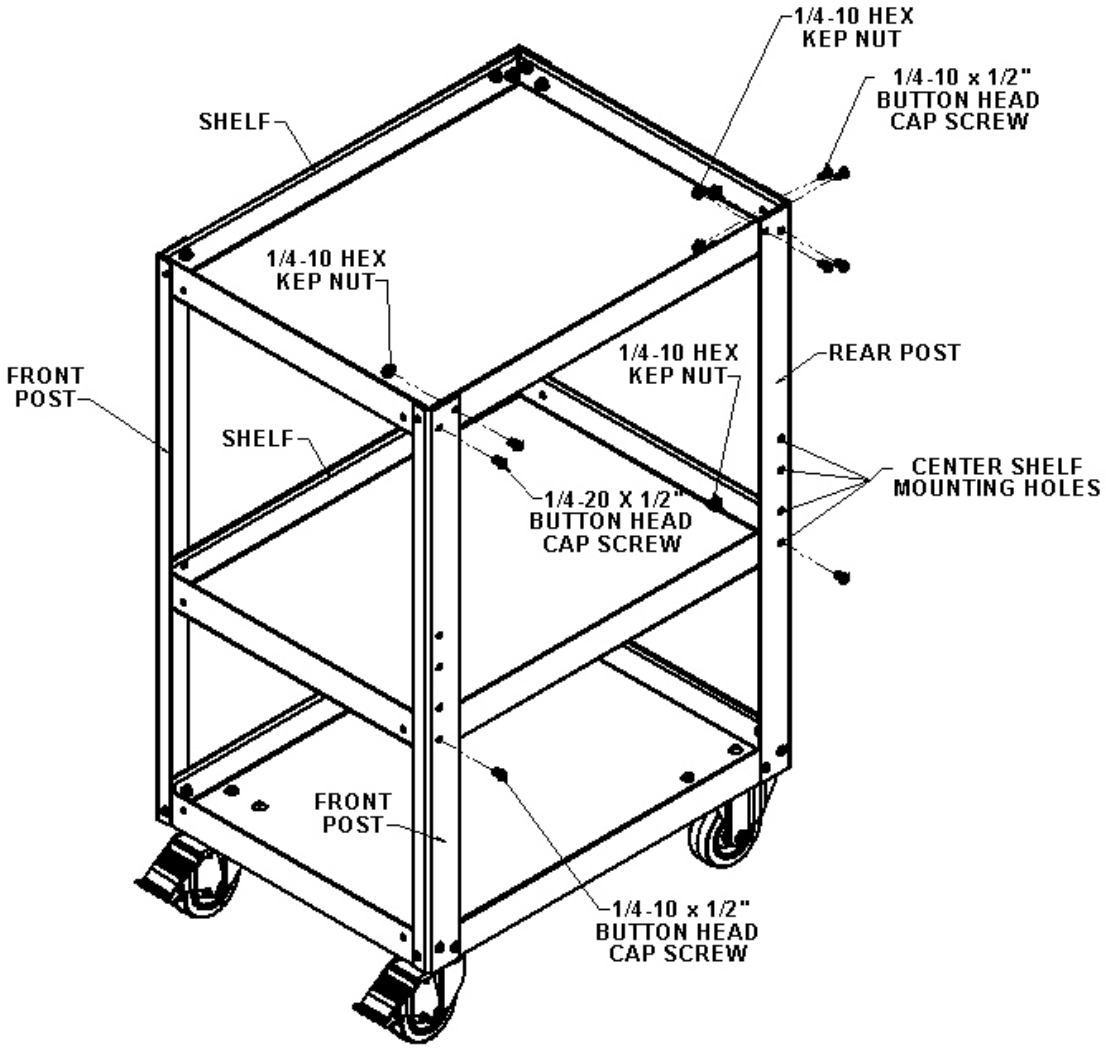

1. Insert Shelf inside Front and Rear Posts and locate at the approximate middle
2. Align mounting holes on shelf with any of the available mounting hole heights desired in the middle section of the posts
3. Loosely bolt Shelf to Front and Rear Posts using (4) included 1/4-20 x 1/2” Button Head Cap Screws and (4) included 1/4-20 Hex Kep Nuts
4. Insert Shelf inside Front and Rear Posts
5. Align mounting holes on shelf with the mounting holes in the top section of the posts
6. Loosely bolt Shelf to Front and Rear Posts using (12) included 1/4-20 x 1/2” Button Head Cap Screws and (12) included 1/4-20 Hex Kep Nuts

Note: Only 3-shelf carts will have a center shelf to install (second shelf not included with 2-shelf carts).

Mobile Automotive Cart Assembly

Handle Assembly:

Tools Required:

- 10 mm sockets, open end or adjustable wrenches

Figure 4 - NS Cart Handle Installation

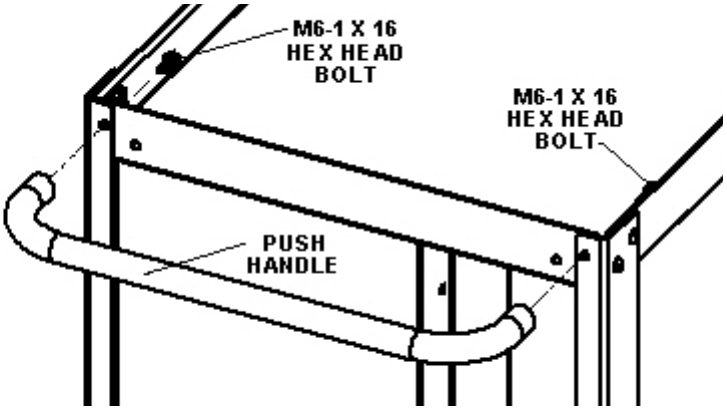

Figure 5 - CL Cart Handle Installation

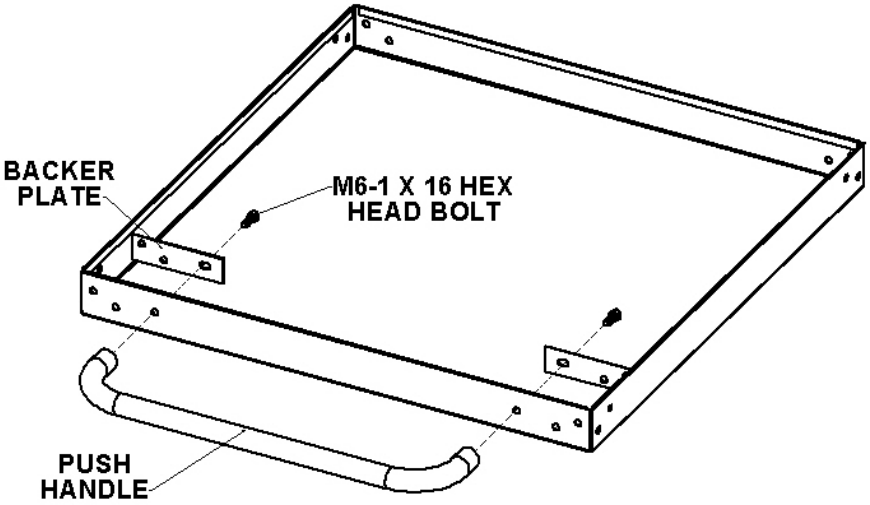

Mobile Automotive Cart Assembly

Figure 6 - ST Cart Handle Installation

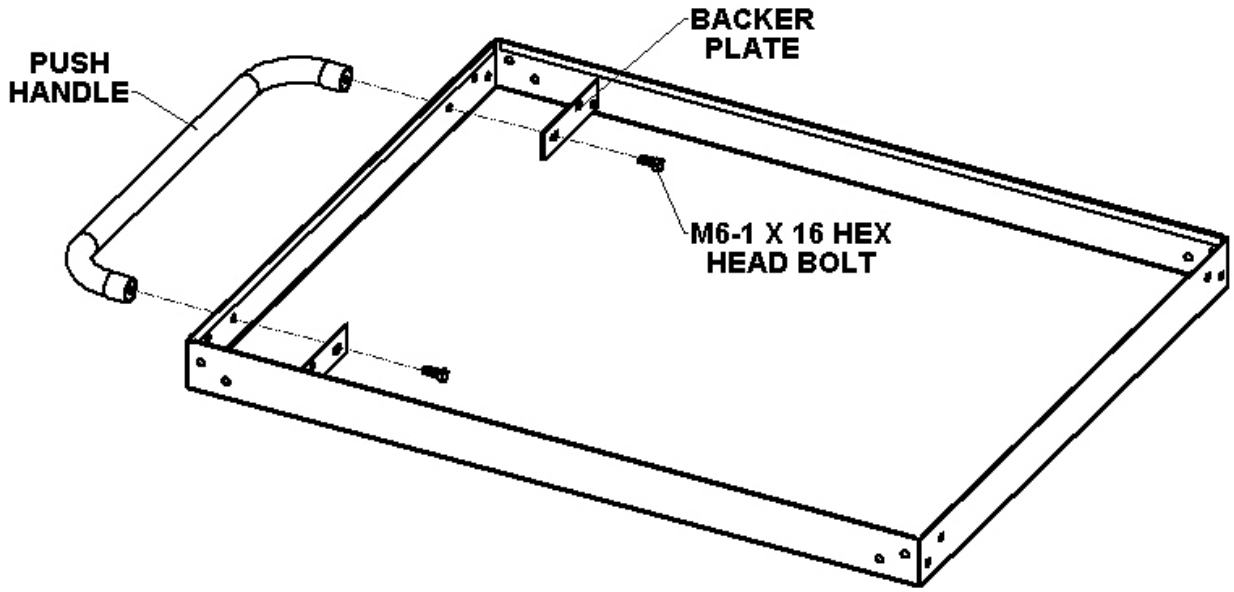

1. Bolt Handle to top mounted Shelf, on Swivel Caster side, through top holes in both Front Posts using (2) included M6-1 16 Hex Head Bolts
2. Both CL and ST size carts require (2) Backer Plates, one for each side of the Puch Handle to make it more rigid as the Handle on these two size carts does not bolt directly to the cart posts.
3. Completely tighten all bolts

Mobile Automotive Cart Assembly

Ribbed Mat into Shelf Installation:

Tools Required:

- None (only ribbed mat)

Figure 7 – Ribbed Mat Installation

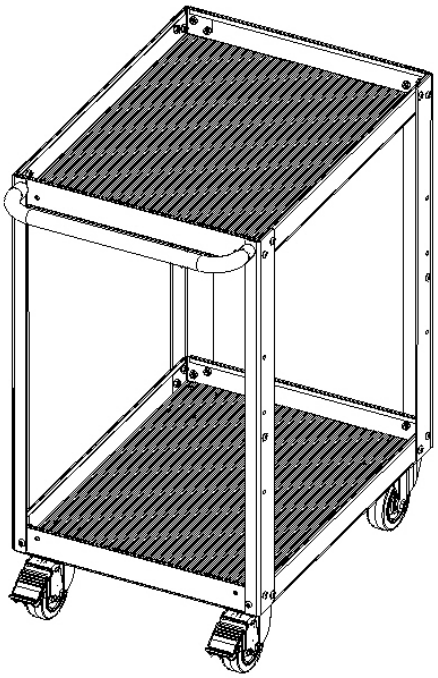

1. Lay a single ribbed mat into each shelf (each shelf gets a mat)

Mobile Automotive Cart Assembly

Making Workspace Work™ is a trademark of Lista International Corporation.

Document Number: MD072A3 Rev 0

Print Date: December 2010

These instructions and other assembly instructions may be found on Lista International Corporation's web site, http://www.listaintl.com. For questions or Technical Support, please call 1-800-722-3020

This manual is proprietary information of Lista International Corporation. Unauthorized reproduction of any portion of this manual is prohibited without the written consent of Lista International Corporation. The material in this manual is for informational purposes only. It is subject to change without notice. Lista International Corporation assumes no responsibility for any typographical errors contained in this manual.

Lista International Corporation
106 Lowland Street
Holliston, MA 01746-2094
Toll Free: (800) 722-3020
Phone: (508) 429-1350
E-mail: sales@listaintl.com
Web: http://www.listaintl.com/

ISO 9001 Certified

© 2010 Lista International Corporation
All rights reserved.